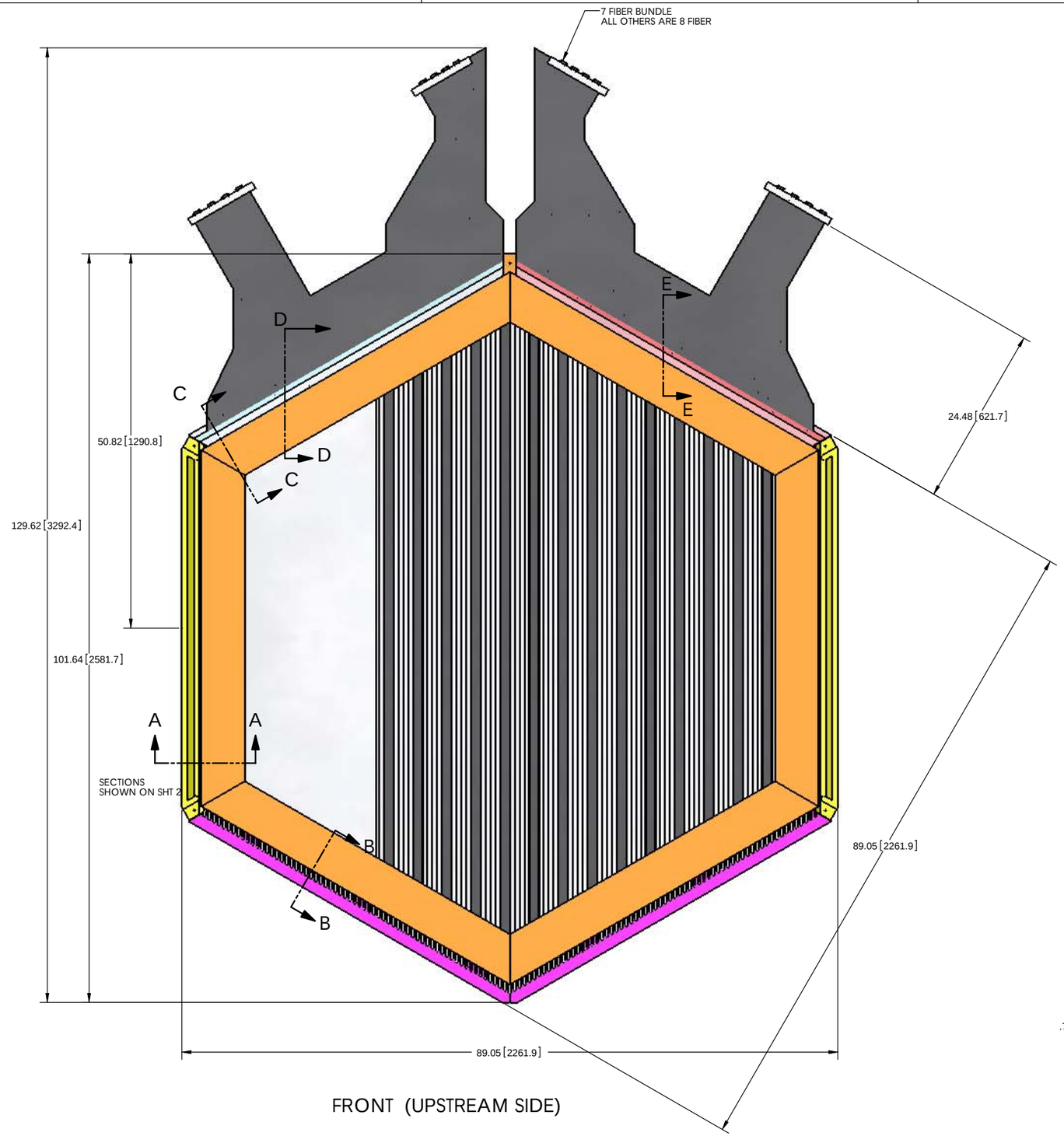

FRONT (UPSTREAM SIDE)

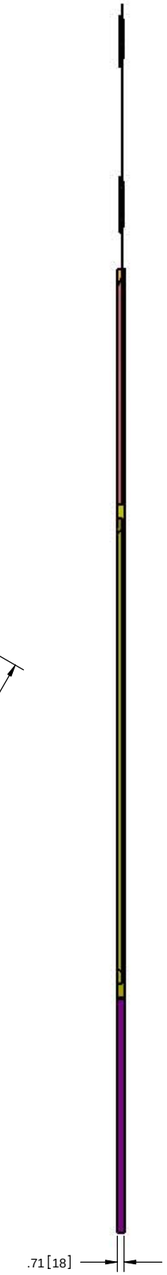

X PLANE & PERIMETER BLOCKS
W/ WEAVE & SKINS

Parts List

ITEM NO.	QTY.	DESCRIPTION	MATERIAL	SIZE	WEIGHT
1	127	SCINTILLATOR EXTRUSION	DOW PS663	SIZE TO PANEL DIMS	1.520
2	6	Pb SEGMENT NARROW EDGE	PURE LEAD	.078 x 5.91 x 48.38	8.23
3	1	FIBER 127 LH	WLS OPTICAL FIBER	-	0.135
4	1	FIBER, 127 RH	WLS OPTICAL FIBER	-	0.135
5	2	EDGE SPACER, BOTTOM	TOTAL PLASTICS, PVC RIGID FOAM	.71 [18mm] x 2.63 x 50.11	2.657
6	2	EDGE SPACER, VERTICAL	TOTAL PLASTICS, PVC RIGID FOAM	.71 [18mm] x 4.28 x 52.13	2.551
7	16	CONNECTOR BOX	DDK	.200 x .793 x 1.067	0.004
8	16	LATCH CONNECTOR	DDK	.20 x .65 x 1.10	0.002
9	16	FIBER FERRULE	DDK	.150 x .661 x .667	0.002
10	1	COMB, CENTER	TOTAL PLASTICS, PVC RIGID FOAM	.71 [18mm] x 5.44 x 10.25	0.642
11	1	COMB RH, X PLANE	PVC, RIGID FOAM	.71 [18mm] x 2.63 x 49.39	3.081
12	1	COMB LH, X PLANE	PVC, RIGID FOAM	.71 [18mm] x 2.63 x 49.39	3.076
13	2	CONNECTOR BACK STRIP-01	ALUM	.13 x 1.00 x 10.00	0.230
14	2	CONNECTOR BACK STRIP-02	ALUM	.13 x 1.00 x 9.00	0.230
15	1	WEAVE	PIEDMOND PLASTICS	#FR25A	3.197
16	1	3M EPOXY	3M EPOXY	#2216A/B	0.001
17	2	SKIN01	PIEDMOND PLASTICS	#FR25A	1.119
18	1	EPOXY-OPTICAL	MILLER STEVENSON CHEMICAL	#EPON815C & EPICURE3243	0.000
19	4	BAGGIE	AMERICOVER	TS10FR, DARK BLUE, 0.012" THK	0.465

NOTE: DO NOT SCALE DRAWING ! ALL TOLERANCES UNLESS OTHERWISE SPECIFIED ARE

DIMENSIONS ARE IN:
☐ INCHES [mm] ☐ mm [IN]

x.xx [x.x] ± .010 [.3]
x.xxx [x.xx] ± .005 [.13]
x.xxxx [x.xxx] ± .0005 [.013]
xx/xx ± 1/32
x° ± 1°

UNIVERSITY OF ROCHESTER
DEPT. OF PHYSICS AND ASTRONOMY
SIDNEY W. BARNES RESEARCH LABORATORY

TITLE
X PLANE ASS'Y

THIRD ANGLE PROJECTION

DRAWN	RSF	DATE 2/15/07
CHECKED	RSF	DATE 2/15/07
APPROVED	RSF	DATE 2/15/07

THIS IS THE PROPERTY OF THE UNIVERSITY OF ROCHESTER. ANY USE OR REPRODUCTION WITHOUT AUTHORIZATION BY THIS UNIVERSITY IS PROHIBITED.

SIZE D DWG NO 70007 REV —

SCALE 1:8 SHEET 1 OF 13

WEIGHT: 216 LBS

FILE: 70007 X PLANE MODULE ASSY 127

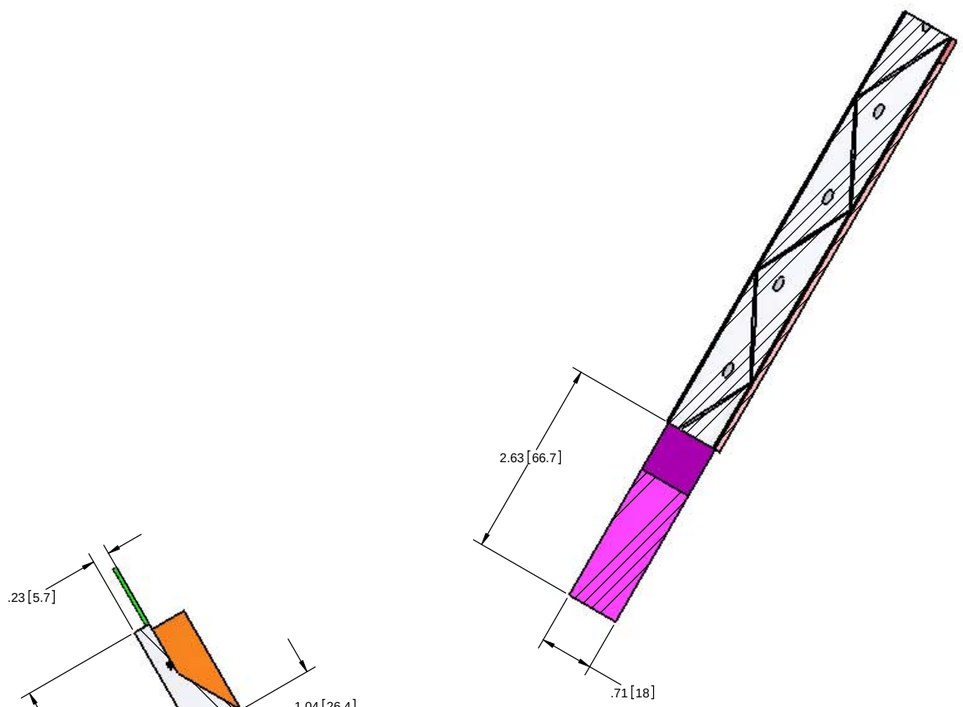

SECTION B-B

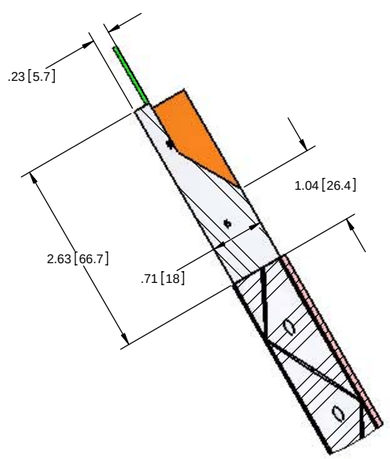

SECTION C-C

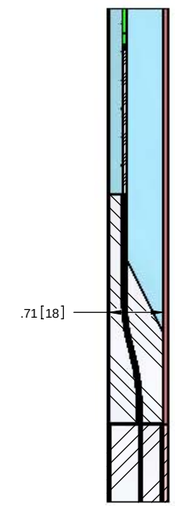

SECTION D-D

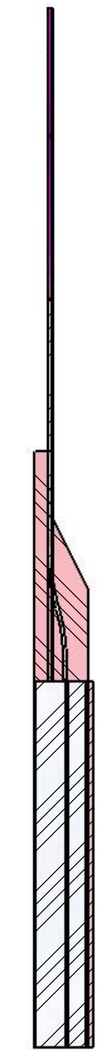

SECTION E-E

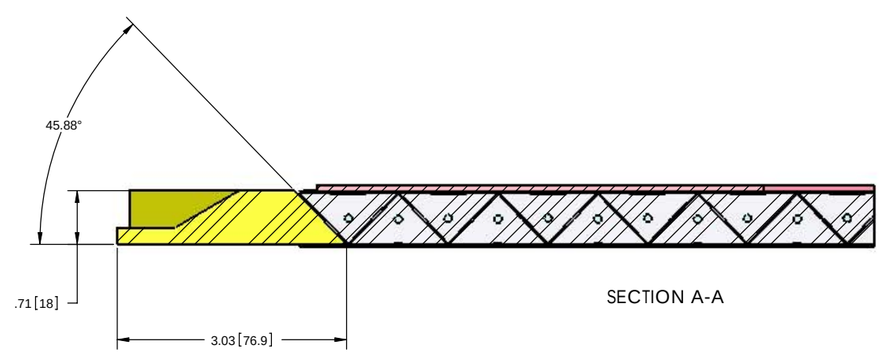

SECTION A-A

NOTE: DO NOT SCALE DRAWING ! ALL TOLERANCES UNLESS OTHERWISE SPECIFIED ARE

DIMENSIONS ARE IN:

☐ INCHES [mm] ☐ mm [IN]

x.xx [x.x] ± .010 [.3]
x.xxx [x.xx] ± .005 [.13]
x.xxxx [x.xxx] ± .0005 [.013]
xx/xx ± 1/32
x° ± 1°

UNIVERSITY OF ROCHESTER
DEPT. OF PHYSICS AND ASTRONOMY
SIDNEY W. BARNES RESEARCH LABORATORY

TITLE: X PLANE ASS'Y

THIRD ANGLE PROJECTION

DRAWN	RSF	DATE 2/15/07
CHECKED	RSF	DATE 2/15/07
APPROVED	RSF	DATE 2/15/07

THIS IS THE PROPERTY OF THE UNIVERSITY OF ROCHESTER. ANY USE OR REPRODUCTION WITHOUT AUTHORIZATION BY THIS UNIVERSITY IS PROHIBITED.

SIZE D | DWG NO 70007 | REV —

SCALE 1:1 | SHEET 2 OF 13

WEIGHT: 216 LBS

FILE: 70007 X PLANE MODULE ASSY 127

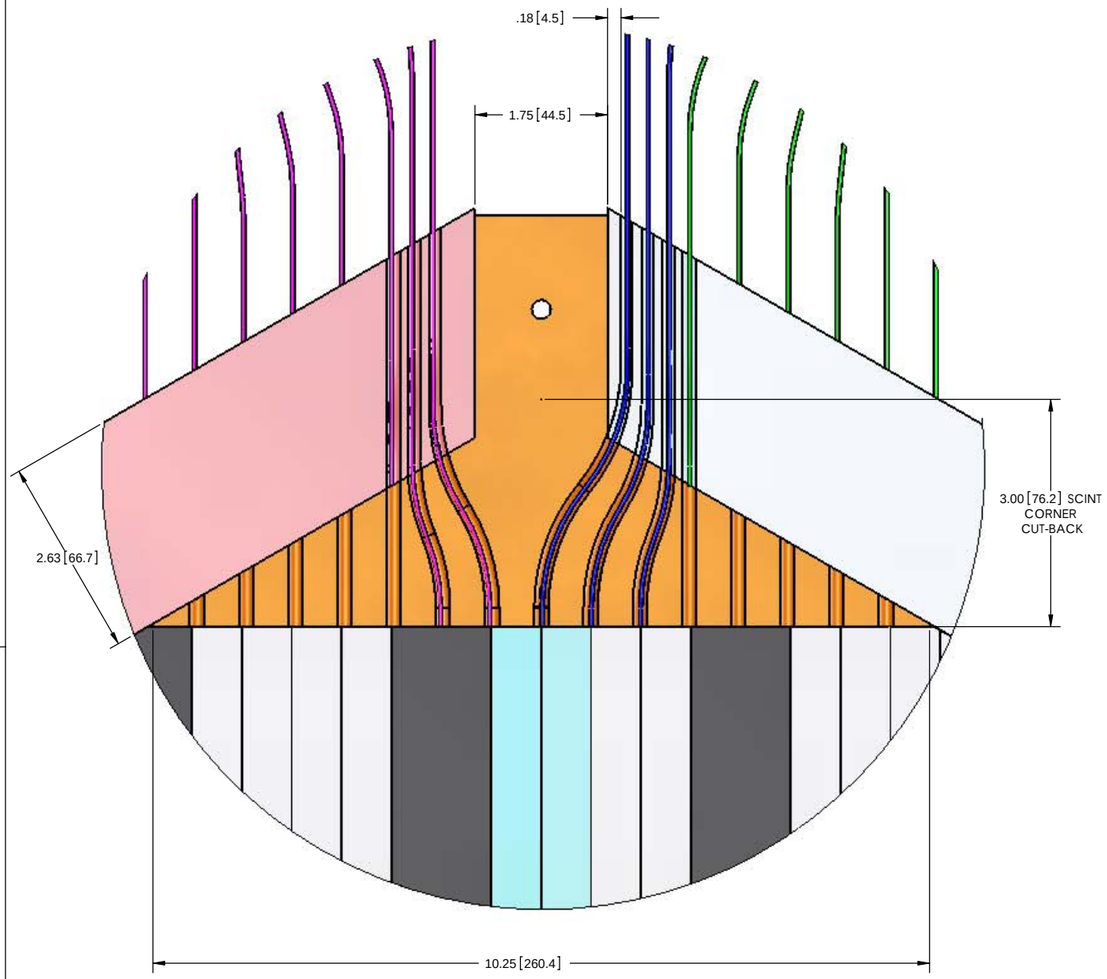

DETAIL E
SCALE 1 : 1

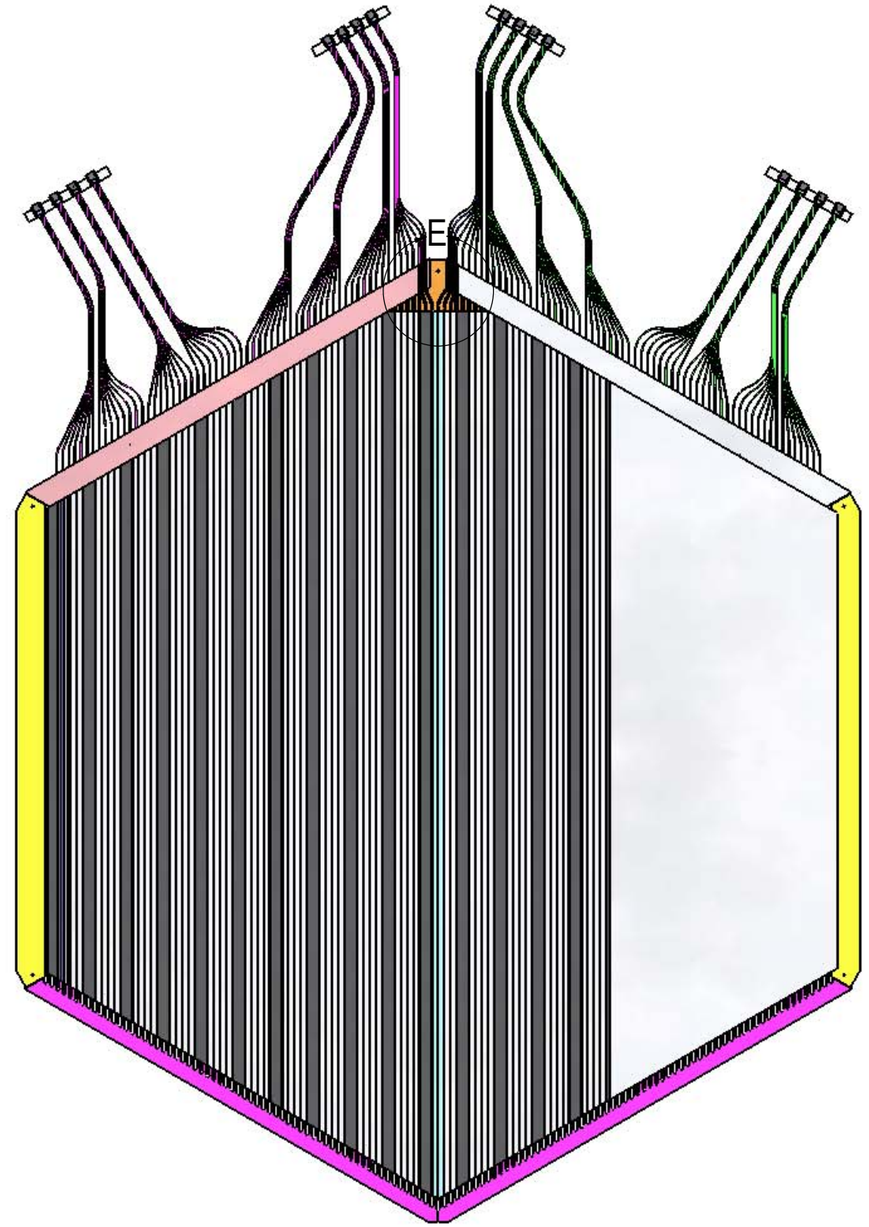

BACK (DOWNSTREAM SIDE)
BAGGIES REMOVED FOR CLARITY

NOTE: DO NOT SCALE DRAWING !
ALL TOLERANCES UNLESS OTHERWISE SPECIFIED ARE

DIMENSIONS ARE IN:
☐ INCHES [mm] ☐ mm [IN]

x.xx [x.x] ± .010 [.3]
x.xxx [x.xx] ± .005 [.13]
x.xxxx [x.xxx] ± .0005 [.013]
xx/xx ± 1/32
x° ± 1°

UNIVERSITY OF ROCHESTER
DEPT. OF PHYSICS AND ASTRONOMY
SIDNEY W. BARNES RESEARCH LABORATORY

TITLE: X PLANE ASS'Y

THIRD ANGLE PROJECTION

DRAWN	RSF	DATE 2/15/07
CHECKED	RSF	DATE 2/15/07
APPROVED	RSF	DATE 2/15/07

THIS IS THE PROPERTY OF THE UNIVERSITY OF ROCHESTER. ANY USE OR REPRODUCTION WITHOUT AUTHORIZATION BY THIS UNIVERSITY IS PROHIBITED.

SIZE D | DWG NO 70007 | REV —

SCALE 1:8 | SHEET 3 OF 13

WEIGHT: 216 LBS

FILE: 70007 X PLANE MODULE ASSY 127

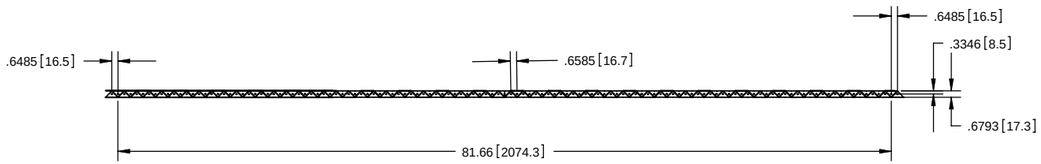

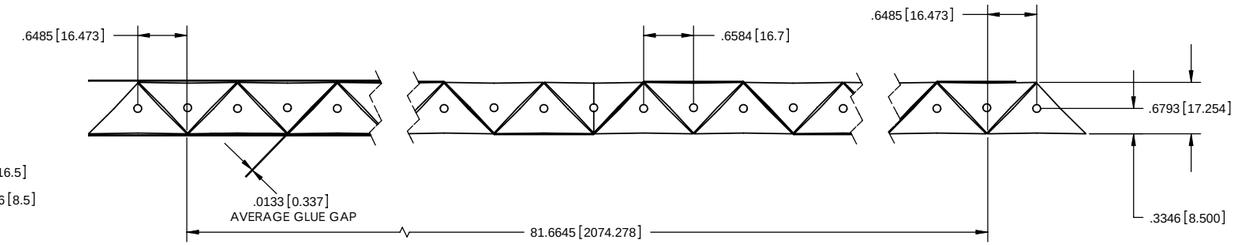

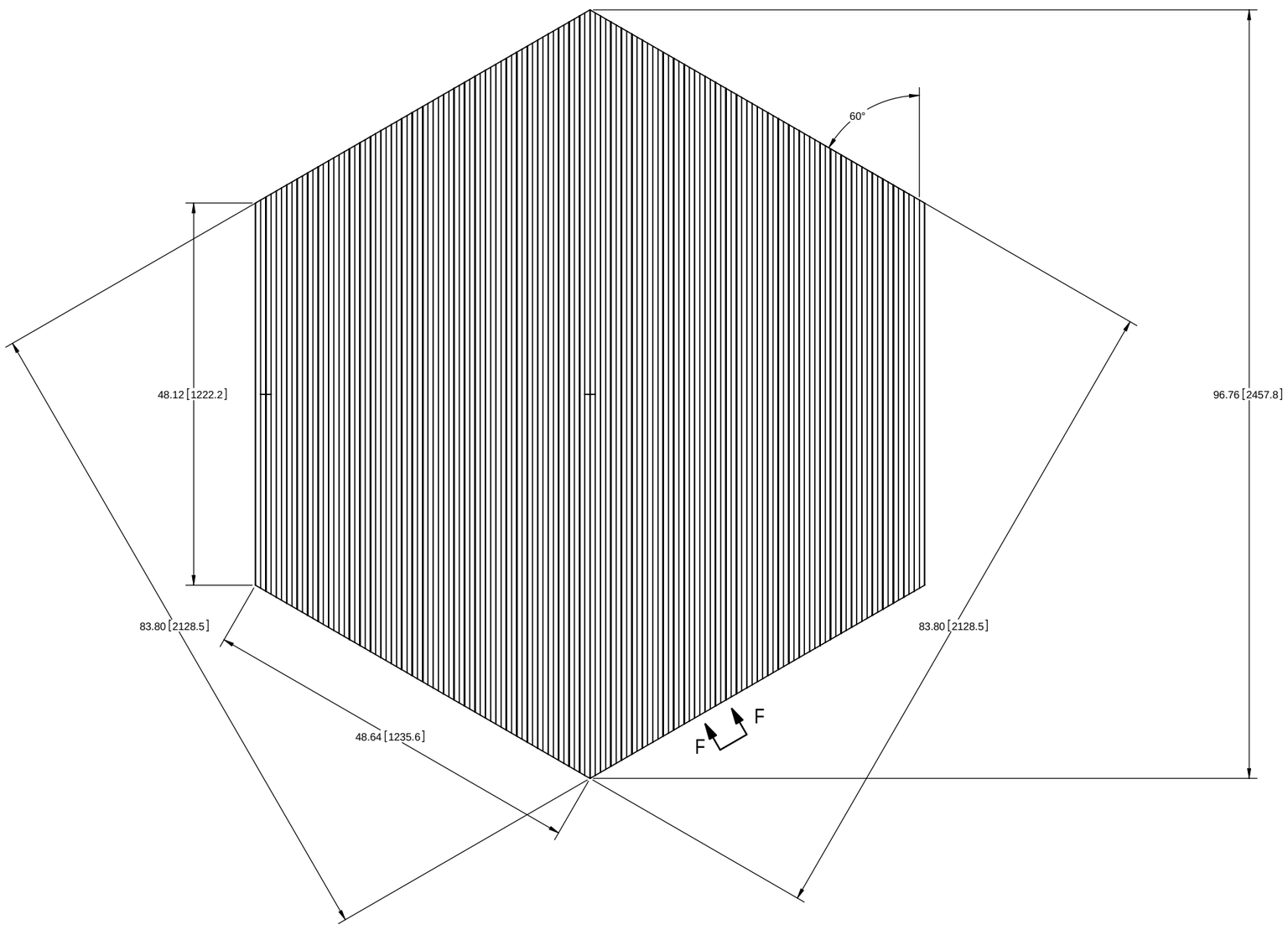

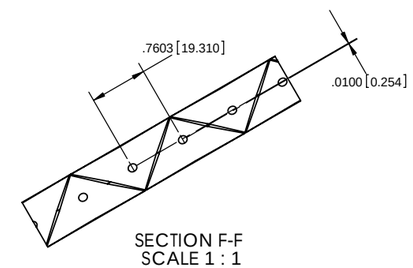

SECTION F-F
SCALE 1 : 1

127 SCINTILLATOR PLANE,
WITHOUT APEX CUT BACK
DIMENSIONS ARE WITHOUT
LEXAN WEAVE ALLOWANCE

Parts List

ITEM NO.	QTY.	DESCRIPTION	MATERIAL	SIZE	WEIGHT
1	127	SCINTILLATOR EXTRUSION	DOW PS663	-	1.520
3	1	WEAVE	PIEDMOND PLASTICS	#FR25A	0.197
4	1	3M EPOXY	3M EPOXY	#2216A/B	0.001
5	2	SKIN01	PIEDMOND PLASTICS	#FR25A	1.119
6	1	EPOXY-OPTICAL	MILLER STEVENSON CHEMICAL	#EPON815C & EPICURE3243	0.000

NOTES: DO NOT SCALE DRAWING !
ALL TOLERANCES UNLESS OTHERWISE SPECIFIED ARE
DIMENSIONS ARE
INCHES [mm] mm [IN]
x.xx [x.x] ± .010 [.3]
x.xxx [x.xx] ± .005 [.13]
x.xxx [x.xxx] ± .0005 [.013]
xx/xx ± 1/32
x° ± 1°

UNIVERSITY OF ROCHESTER
DEPT. OF MECHANICAL ENGINEERING
SIDNEY W. BUCKLER REGISTERED LABORATORY

TITLE: X PLANE ASSY

THIRD ANGLE PROJECTION

DRAWN RSF	DATE 2/15/07	
CHECKED RSF	DATE 2/15/07	
APPROVED RSF	DATE 2/15/07	

THIS IS THE PROPERTY OF THE UNIVERSITY OF ROCHESTER. ANY USE OR REPRODUCTION WITHOUT AUTHORIZATION BY THIS UNIVERSITY IS PROHIBITED.

SIZE D | DWG NO 70007 | REV —
SCALE 1:8 | SHEET 4 OF 13

WEIGHT: 196 LBS

FILE: 70007 X PLANE MODULE ASSY 127

REVISIONS				
ZONE	REV	DESCRIPTION	DATE	APPRV
–	–	INITIAL ISSUE	–	–

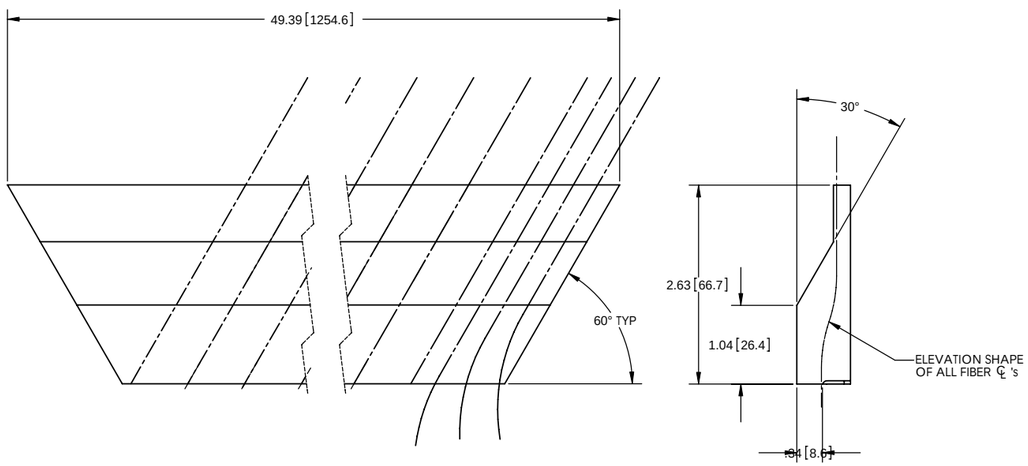

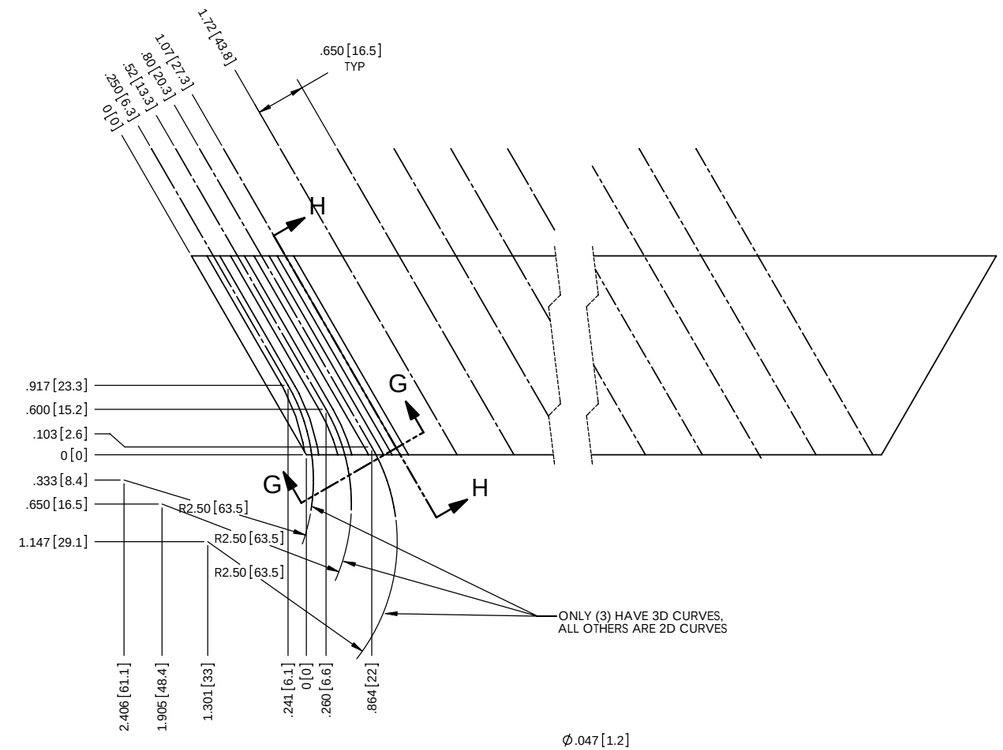

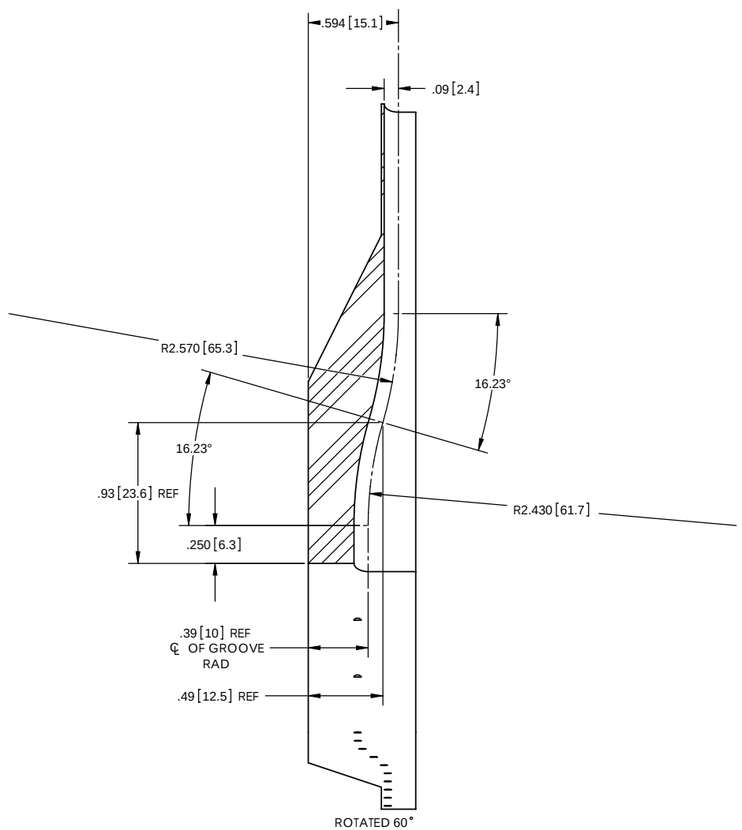

SECTION H-H
SCALE 2 : 1

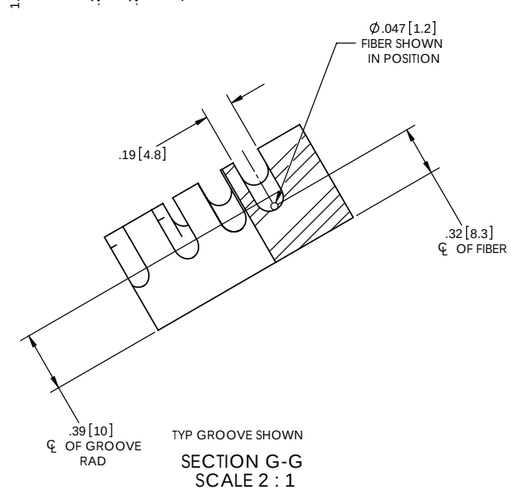

SECTION G-G
SCALE 2 : 1

UPPER COMB, LH
X PLANE

UPPER COMB, LH SHOWN,
RH IS OPPOSITE - SEE SHT 2

NOTE: DO NOT SCALE DRAWING ! ALL TOLERANCES UNLESS OTHERWISE SPECIFIED ARE

DIMENSIONS ARE IN:
☐ INCHES [mm] ☐ mm [IN]

x.xx [x.x] ± .010 [.3]
x.xxx [x.xx] ± .005 [.13]
x.xxxx [x.xxx] ± .0005 [.013]
xx/xx ± 1/32
x° ± 1°

UNIVERSITY OF ROCHESTER
DEPT. OF PHYSICS AND ASTRONOMY
SIDNEY W. BARNES RESEARCH LABORATORY

TITLE
X PLANE ASS'Y

THIRD ANGLE PROJECTION

DRAWN	RSF	DATE 2/15/07
CHECKED	RSF	DATE 2/15/07
APPROVED	RSF	DATE 2/15/07

THIS IS THE PROPERTY OF THE UNIVERSITY OF ROCHESTER. ANY USE OR REPRODUCTION WITHOUT AUTHORIZATION BY THIS UNIVERSITY IS PROHIBITED.

SIZE	DWG NO	REV
D	70007	—
SCALE 1:1	SHEET 5 OF 13	

WEIGHT: 3.076 LBS

FILE: 70007 X PLANE MODULE ASSY 127

REVISIONS				
ZONE	REV	DESCRIPTION	DATE	APPRV
–	–	INITIAL ISSUE	–	–

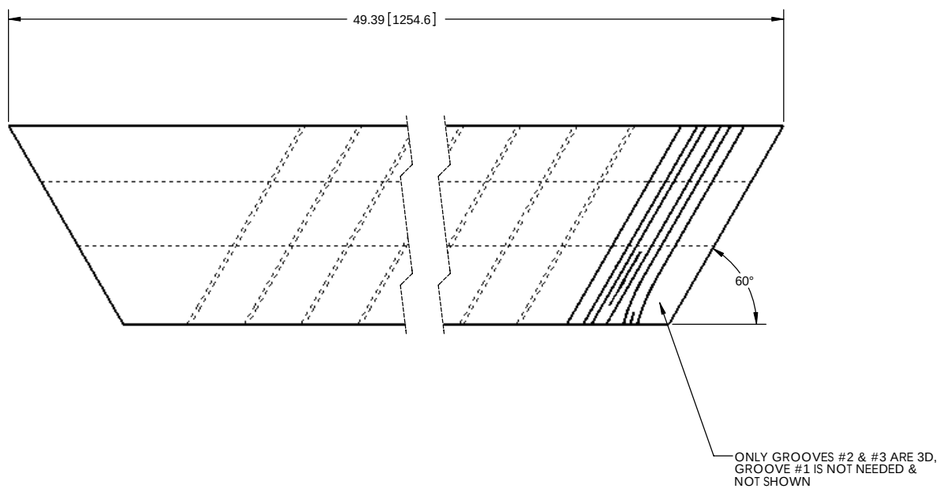

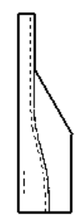

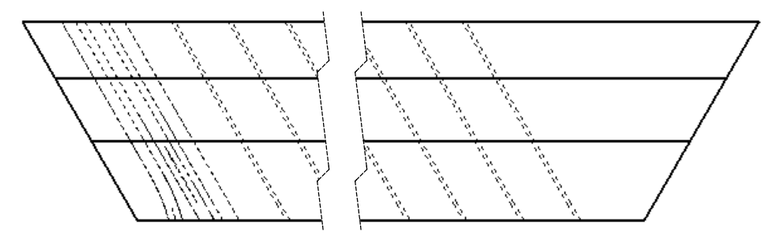

UPPER COMB, RH
OPPOSITE HAND OF
UPPER COMB, LH
SHOWN ON SHT 1

NOTE: DO NOT SCALE DRAWING !
ALL TOLERANCES UNLESS
OTHERWISE SPECIFIED ARE

DIMENSIONS ARE IN:
☐ INCHES [mm] ☐ mm [IN]

x.xx [x.x] ± .010 [.3]
x.xxx [x.xx] ± .005 [.13]
x.xxxx [x.xxx] ± .0005 [.013]
xx/xx ± 1/32
x° ± 1°

UNIVERSITY OF ROCHESTER
DEPT. OF PHYSICS AND ASTRONOMY
SIDNEY W. BARNES RESEARCH LABORATORY

TITLE: X PLANE ASS'Y

THIRD ANGLE PROJECTION

DRAWN	RSF	DATE 2/15/07
CHECKED	RSF	DATE 2/15/07
APPROVED	RSF	DATE 2/15/07

THIS IS THE PROPERTY OF THE UNIVERSITY OF ROCHESTER. ANY USE OR REPRODUCTION WITHOUT AUTHORIZATION BY THIS UNIVERSITY IS PROHIBITED.

SIZE D | DWG NO 70007 | REV —

SCALE 1:1 | SHEET 6 OF 13

WEIGHT: 3.081 LBS

FILE: 70007 X PLANE MODULE ASSY 127

REVISIONS				
ZONE	REV.	DESCRIPTION	DATE	APPRV
–	–	INITIAL ISSUE	–	–

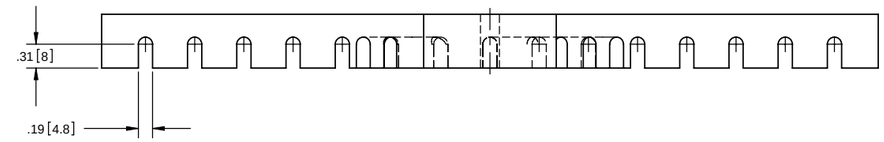

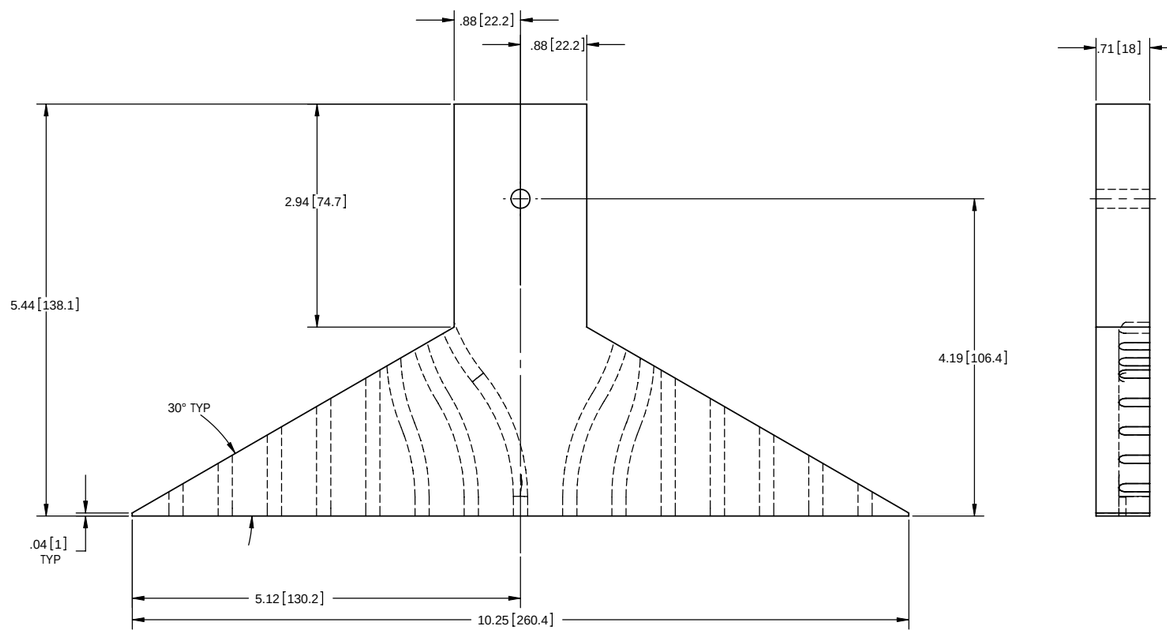

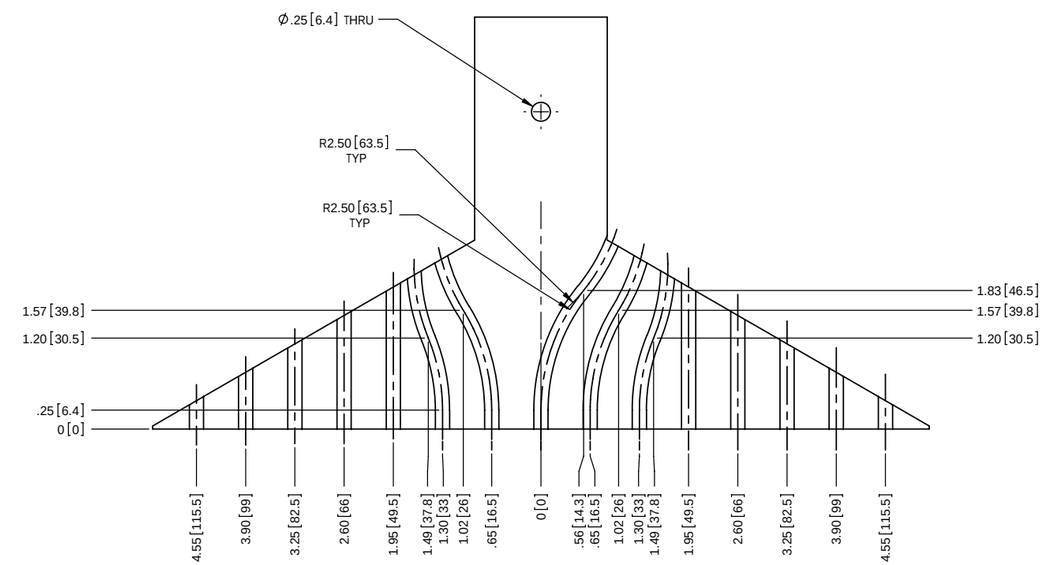

CENTER COMB
ALL CURVED GROOVES
ARE PLANAR, 2D

NOTE: CENTER COMB IS THE SAME FOR
U, V, & X PLANES

NOTE: DO NOT SCALE DRAWING !
ALL TOLERANCES UNLESS
OTHERWISE SPECIFIED ARE

DIMENSIONS ARE IN:
☐ INCHES [mm] ☐ mm [IN]

x.xx [x.x] ± .010 [.3]
x.xxx [x.xx] ± .005 [.13]
x.xxxx [x.xxx] ± .0005 [.013]
xx/xx ± 1/32
x° ± 1°

UNIVERSITY OF ROCHESTER
DEPT. OF PHYSICS AND ASTRONOMY
SIDNEY W. BARNES RESEARCH LABORATORY

TITLE: X PLANE ASS'Y

THIRD ANGLE PROJECTION

DRAWN	RSF	DATE 2/15/07
CHECKED	RSF	DATE 2/15/07
APPROVED	RSF	DATE 2/15/07

THIS IS THE PROPERTY OF THE UNIVERSITY OF ROCHESTER. ANY USE OR REPRODUCTION WITHOUT AUTHORIZATION BY THIS UNIVERSITY IS PROHIBITED.

SIZE D | DWG NO 70007 | REV —

SCALE 1:1 | SHEET 7 OF 13

WEIGHT: 0.642 LBS

FILE: 70007 X PLANE MODULE ASSY 127

REVISIONS				
ZONE	REV	DESCRIPTION	DATE	APPRV
–	–	INITIAL ISSUE	–	–

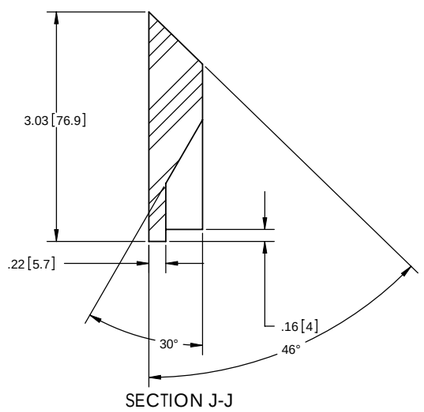

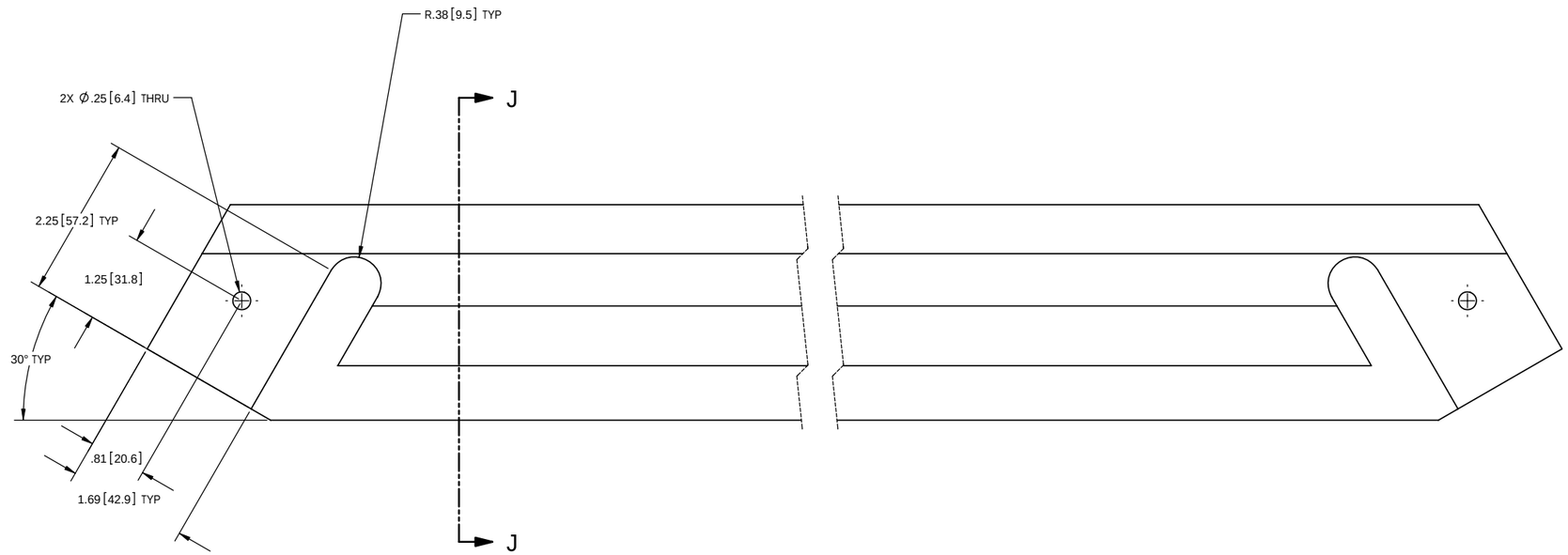

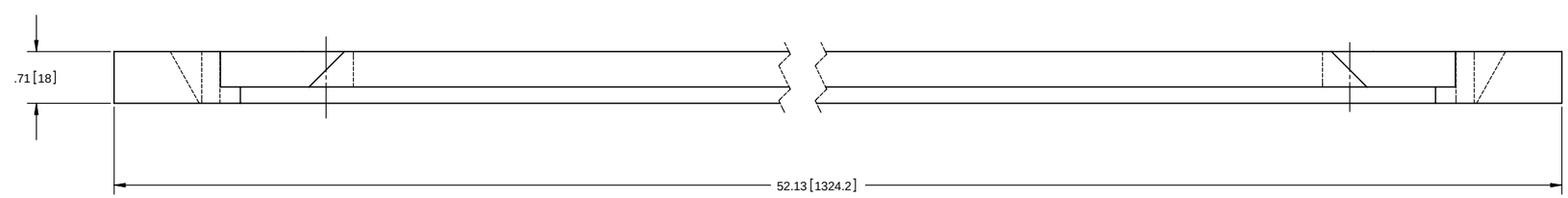

SIDE SPACER BAR
QTY: 2 PER PLANE

NOTE: SIDE SPACER BARS ARE THE SAME FOR U, V, & X PLANES

NOTE: DO NOT SCALE DRAWING ! ALL TOLERANCES UNLESS OTHERWISE SPECIFIED ARE

DIMENSIONS ARE IN:
☐ INCHES [mm] ☐ mm [IN]

x.xx [x.x] ± .010 [.3]
x.xxx [x.xx] ± .005 [.13]
x.xxxx [x.xxx] ± .0005 [.013]
xx/xx ± 1/32
x° ± 1°

UNIVERSITY OF ROCHESTER
DEPT. OF PHYSICS AND ASTRONOMY
SIDNEY W. BARNES RESEARCH LABORATORY

TITLE: X PLANE ASS'Y

THIRD ANGLE PROJECTION

DRAWN	RSF	DATE 2/15/07
CHECKED	RSF	DATE 2/15/07
APPROVED	RSF	DATE 2/15/07

THIS IS THE PROPERTY OF THE UNIVERSITY OF ROCHESTER. ANY USE OR REPRODUCTION WITHOUT AUTHORIZATION BY THIS UNIVERSITY IS PROHIBITED.

SIZE D DWG NO 70007 REV —

SCALE 1:1 SHEET 8 OF 13

WEIGHT: 2.551 LBS

FILE: 70007 X PLANE MODULE ASSY 127

REVISIONS				
ZONE	REV	DESCRIPTION	DATE	APPRV
–	–	INITIAL ISSUE	–	–

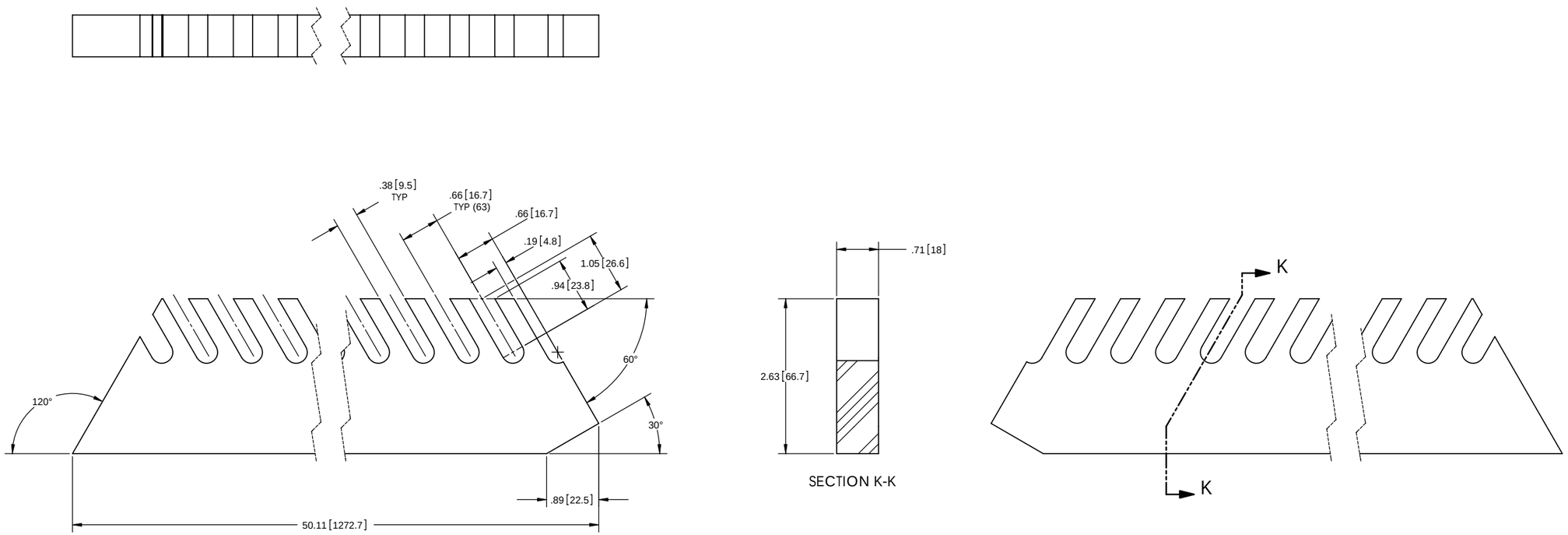

BOTTOM COMBS
QTY: 2 PER PLANE

NOTE: BOTTOM COMBS ARE THE SAME FOR U, V, & X PLANES

NOTE: DO NOT SCALE DRAWING ! ALL TOLERANCES UNLESS OTHERWISE SPECIFIED ARE

DIMENSIONS ARE IN:
☐ INCHES [mm] ☐ mm [IN]

x.xx [x.x] ± .010 [.3]
x.xxx [x.xx] ± .005 [.13]
x.xxxx [x.xxx] ± .0005 [.013]
xx/xx ± 1/32
x° ± 1°

UNIVERSITY OF ROCHESTER
DEPT. OF PHYSICS AND ASTRONOMY
SIDNEY W. BARNES RESEARCH LABORATORY

TITLE: X PLANE ASS'Y

THIRD ANGLE PROJECTION

DRAWN	RSF	DATE 2/15/07
CHECKED	RSF	DATE 2/15/07
APPROVED	RSF	DATE 2/15/07

THIS IS THE PROPERTY OF THE UNIVERSITY OF ROCHESTER. ANY USE OR REPRODUCTION WITHOUT AUTHORIZATION BY THIS UNIVERSITY IS PROHIBITED.

SIZE D | DWG NO 70007 | REV —

SCALE 1:1 | SHEET 9 OF 13

WEIGHT: 2.657 LBS

FILE: 70007 X PLANE MODULE ASSY 127

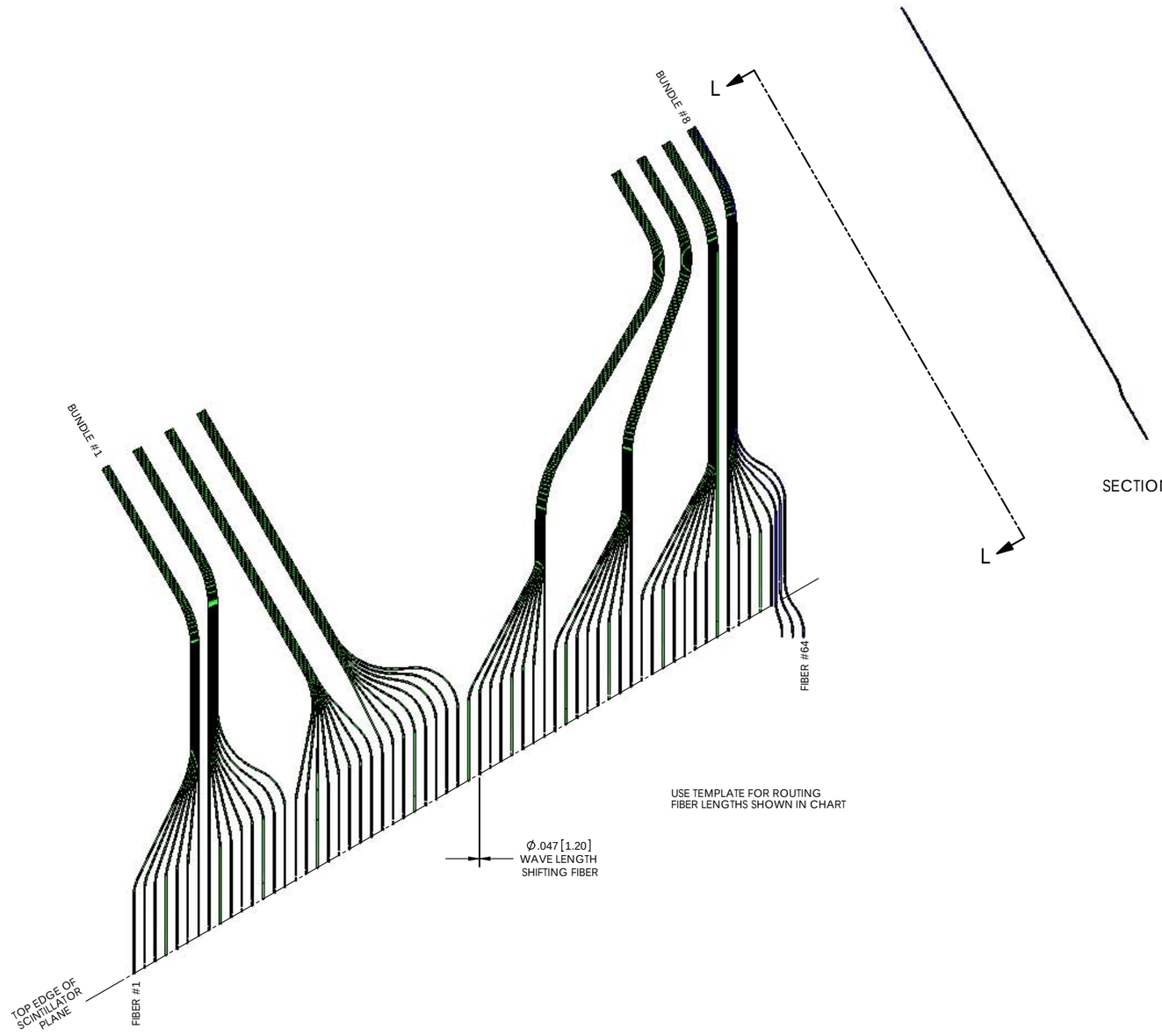

SECTION L-L

NOTE: DO NOT SCALE DRAWING !
ALL TOLERANCES UNLESS
OTHERWISE SPECIFIED ARE

DIMENSIONS ARE IN:
☐ INCHES [mm] ☐ mm [IN]

x.xx [x.x] ± .010 [.3]
x.xxx [x.xx] ± .005 [.13]
x.xxxx [x.xxx] ± .0005 [.013]
xx/xx ± 1/32
x° ± 1°

UNIVERSITY OF ROCHESTER
DEPT. OF PHYSICS AND ASTRONOMY
SIDNEY W. BARNES RESEARCH LABORATORY

TITLE: X PLANE ASS'Y

THIRD ANGLE PROJECTION

DRAWN	RSF	DATE 2/15/07
CHECKED	RSF	DATE 2/15/07
APPROVED	RSF	DATE 2/15/07

THIS IS THE PROPERTY OF THE UNIVERSITY OF ROCHESTER. ANY USE OR REPRODUCTION WITHOUT AUTHORIZATION BY THIS UNIVERSITY IS PROHIBITED.

SIZE	DWG NO	REV
D	70007	—
SCALE 1:4	SHEET 10 OF 13	

WEIGHT: 0.135 LBS

FILE: 70007 X PLANE MODULE ASSY 127

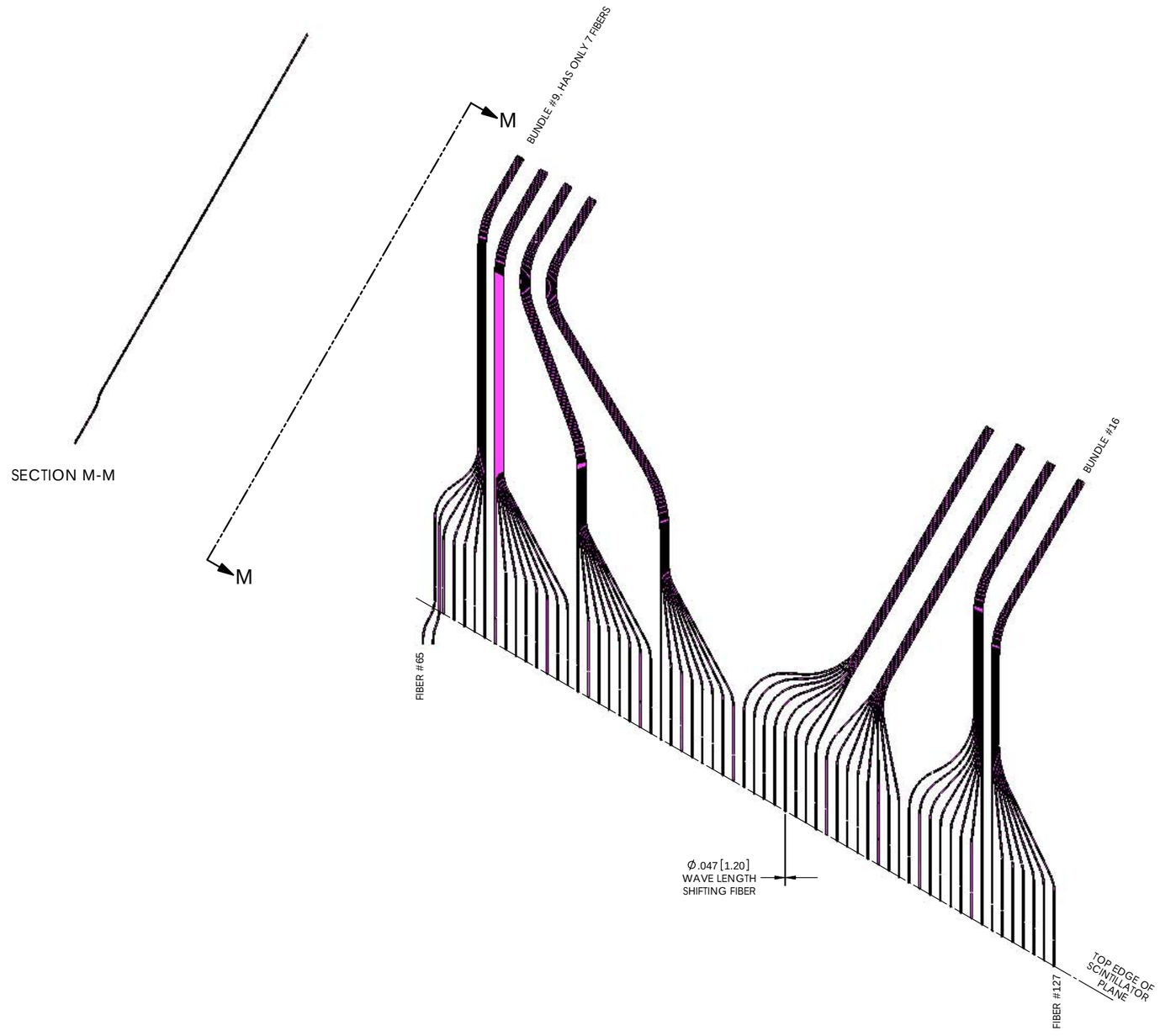

USE TEMPLATE FOR ROUTING
FIBER LENGTHS SHOWN IN CHART

NOTE: DO NOT SCALE DRAWING !
ALL TOLERANCES UNLESS OTHERWISE SPECIFIED ARE

DIMENSIONS ARE IN:
☐ INCHES [mm] ☐ mm [IN]

x.xx [x.x] ± .010 [.3]
x.xxx [x.xx] ± .005 [.13]
x.xxxx [x.xxx] ± .0005 [.013]
xx/xx ± 1/32
x° ± 1°

UNIVERSITY OF ROCHESTER
DEPT. OF PHYSICS AND ASTRONOMY
SIDNEY W. BARNES RESEARCH LABORATORY

TITLE: X PLANE ASS'Y

THIRD ANGLE PROJECTION

DRAWN	RSF	DATE 2/15/07
CHECKED	RSF	DATE 2/15/07
APPROVED	RSF	DATE 2/15/07

THIS IS THE PROPERTY OF THE UNIVERSITY OF ROCHESTER. ANY USE OR REPRODUCTION WITHOUT AUTHORIZATION BY THIS UNIVERSITY IS PROHIBITED.

SIZE D | DWG NO 70007 | REV —

SCALE 1:4 | SHEET 11 OF 13

WEIGHT: 0.135 LBS

FILE: 70007 X PLANE MODULE ASSY 127

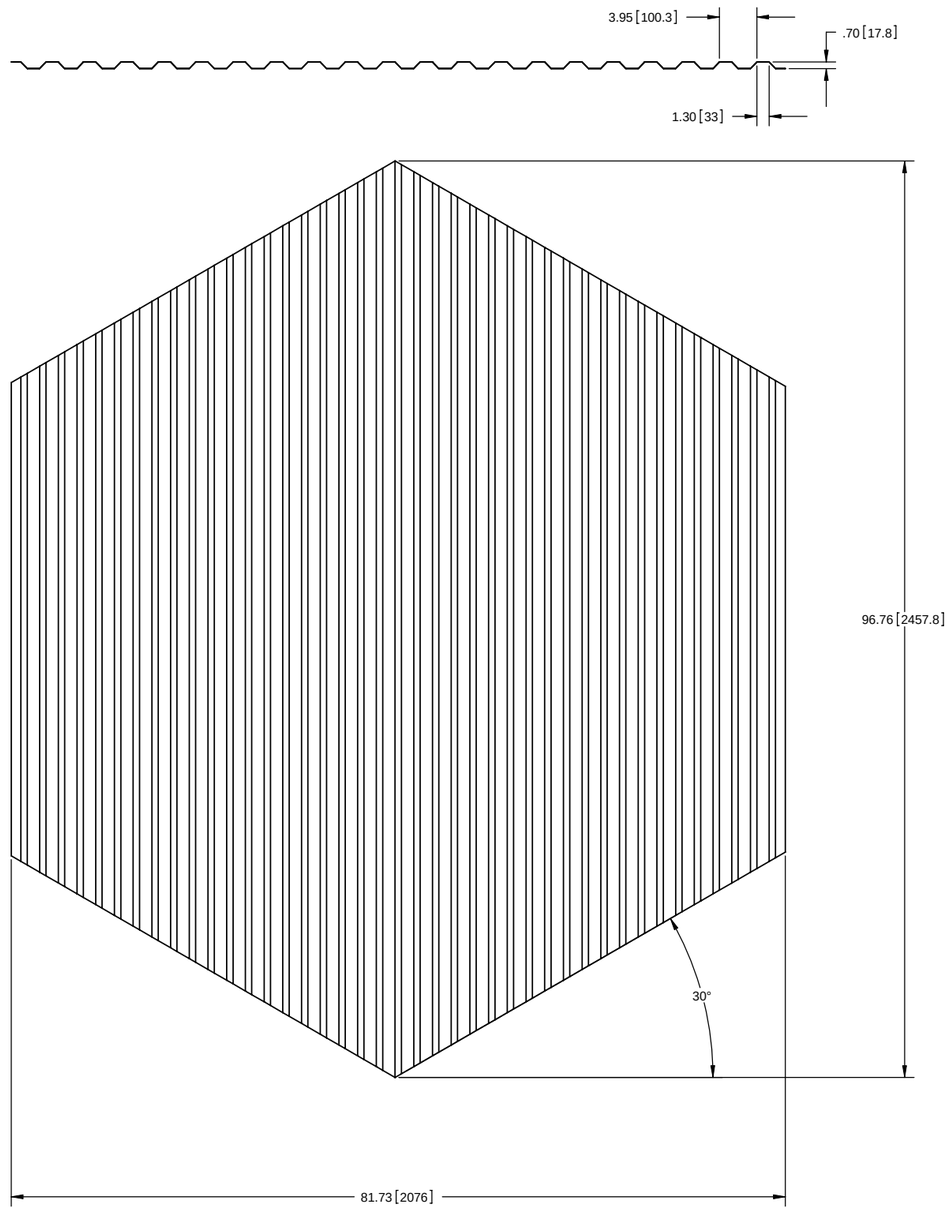

NOTE: DO NOT SCALE DRAWING !
ALL TOLERANCES UNLESS OTHERWISE SPECIFIED ARE

DIMENSIONS ARE IN:
☐ INCHES [mm] ☐ mm [IN]

x.xx [x.x] ± .010 [.3]
x.xxx [x.xx] ± .005 [.13]
x.xxxx [x.xxx] ± .0005 [.013]
xx/xx ± 1/32
x° ± 1°

UNIVERSITY OF ROCHESTER
DEPT. OF PHYSICS AND ASTRONOMY
SIDNEY W. BARNES RESEARCH LABORATORY

TITLE: X PLANE ASS'Y

THIRD ANGLE PROJECTION

DRAWN	RSF	DATE 2/15/07
CHECKED	RSF	DATE 2/15/07
APPROVED	RSF	DATE 2/15/07

THIS IS THE PROPERTY OF THE UNIVERSITY OF ROCHESTER. ANY USE OR REPRODUCTION WITHOUT AUTHORIZATION BY THIS UNIVERSITY IS PROHIBITED.

SIZE D | DWG NO 70007 | REV —

SCALE 1:8 | SHEET 12 OF 13

WEIGHT: 3.197 LBS

FILE: 70007 X PLANE MODULE ASSY 127

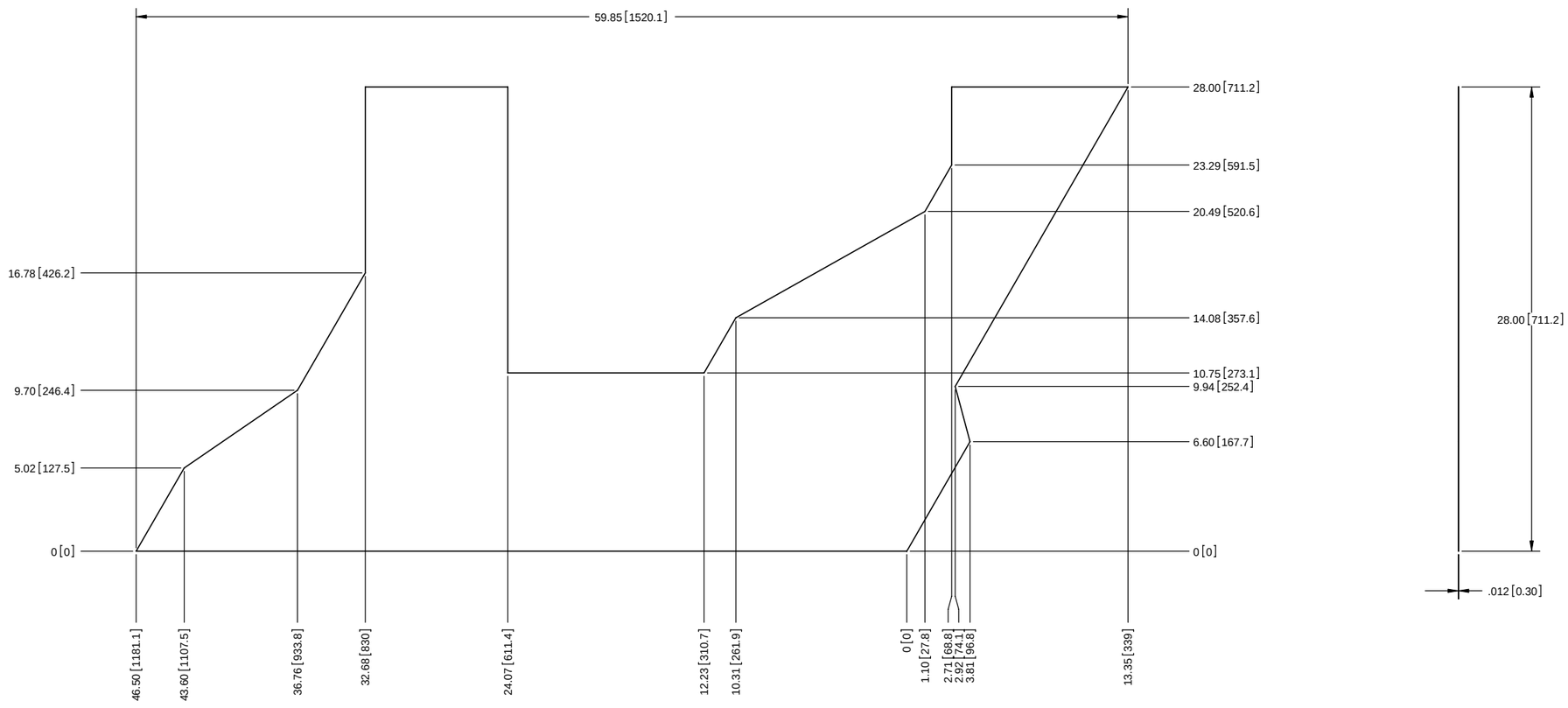

NOTE: DO NOT SCALE DRAWING !
ALL TOLERANCES UNLESS OTHERWISE SPECIFIED ARE

DIMENSIONS ARE IN:
☐ INCHES [mm] ☐ mm [IN]

x.xx [x.x] ± .010 [.3]
x.xxx [x.xx] ± .005 [.13]
x.xxxx [x.xxx] ± .0005 [.013]
xx/xx ± 1/32
x° ± 1°

UNIVERSITY OF ROCHESTER
DEPT. OF PHYSICS AND ASTRONOMY
SIDNEY W. BARNES RESEARCH LABORATORY

TITLE: X PLANE ASS'Y

THIRD ANGLE PROJECTION

DRAWN	RSF	DATE 2/15/07
CHECKED	RSF	DATE 2/15/07
APPROVED	RSF	DATE 2/15/07

THIS IS THE PROPERTY OF THE UNIVERSITY OF ROCHESTER. ANY USE OR REPRODUCTION WITHOUT AUTHORIZATION BY THIS UNIVERSITY IS PROHIBITED.

SIZE D | DWG NO 70005 | REV —
SCALE 1:4 | SHEET 13 OF 13

WEIGHT: 0.465 LBS

FILE: 70007 X PLANE MODULE ASSY 127